MODELS: WLE624WA WLE626WA

EX. VIEW DRAWING 8168
FRONT FRAME ASSEMBLY

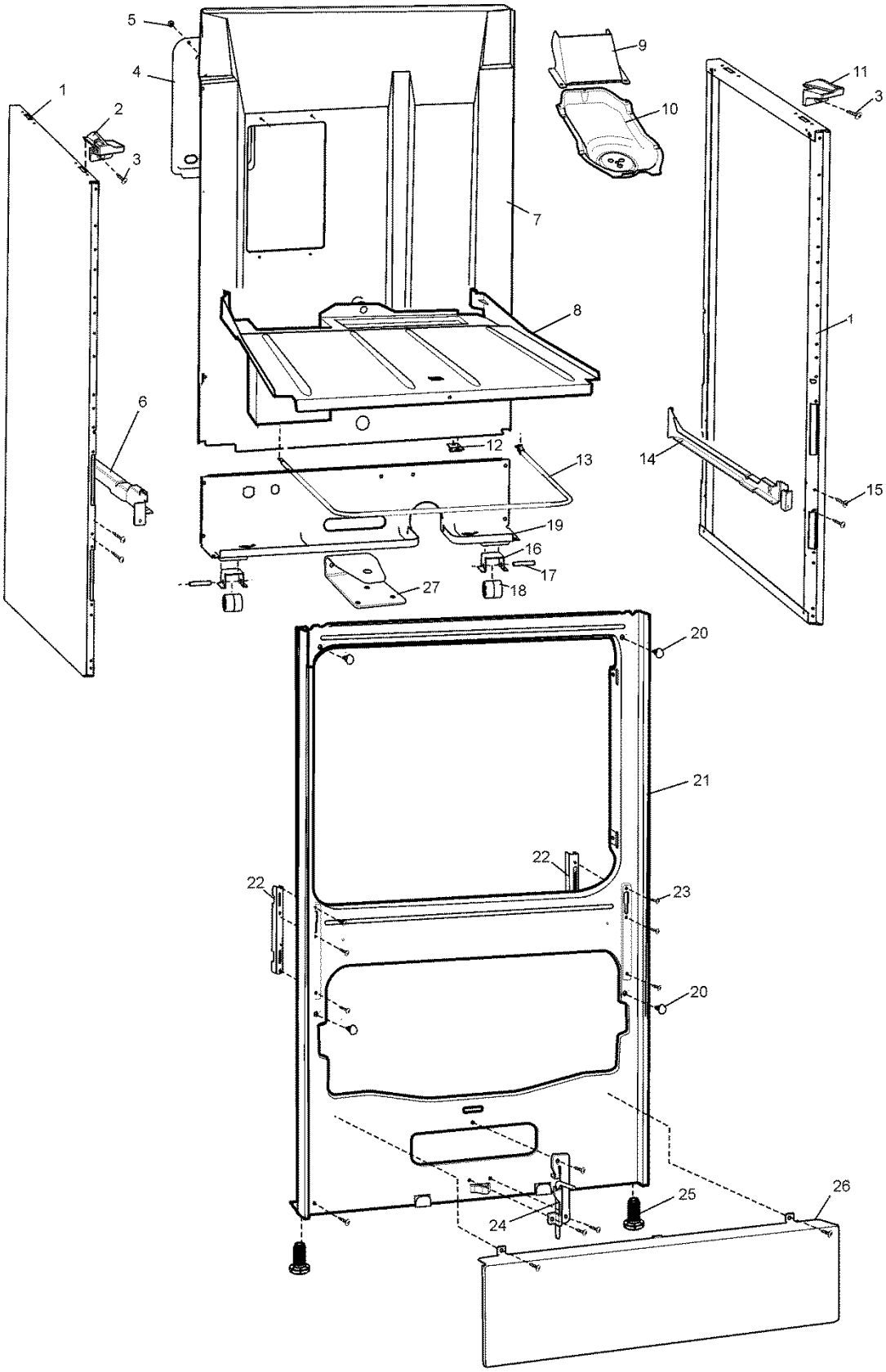

MODEL: WLE624WA

EX. VIEW DRAWING 8163
OVEN ASSEMBLY

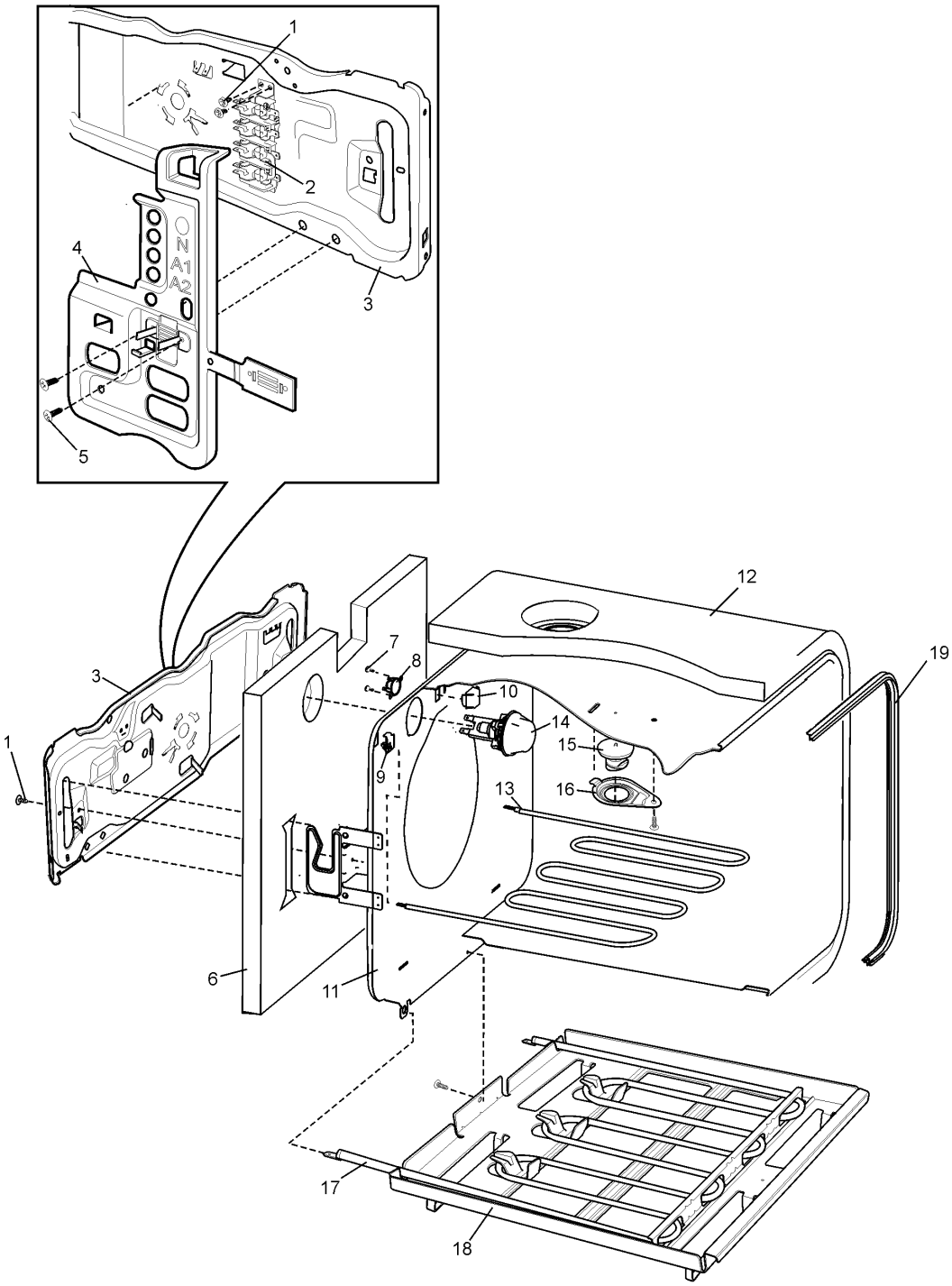

MODELS: WLE624WA

EX. VIEW DRAWING 5417a
CONTROL PANEL ASSEMBLY

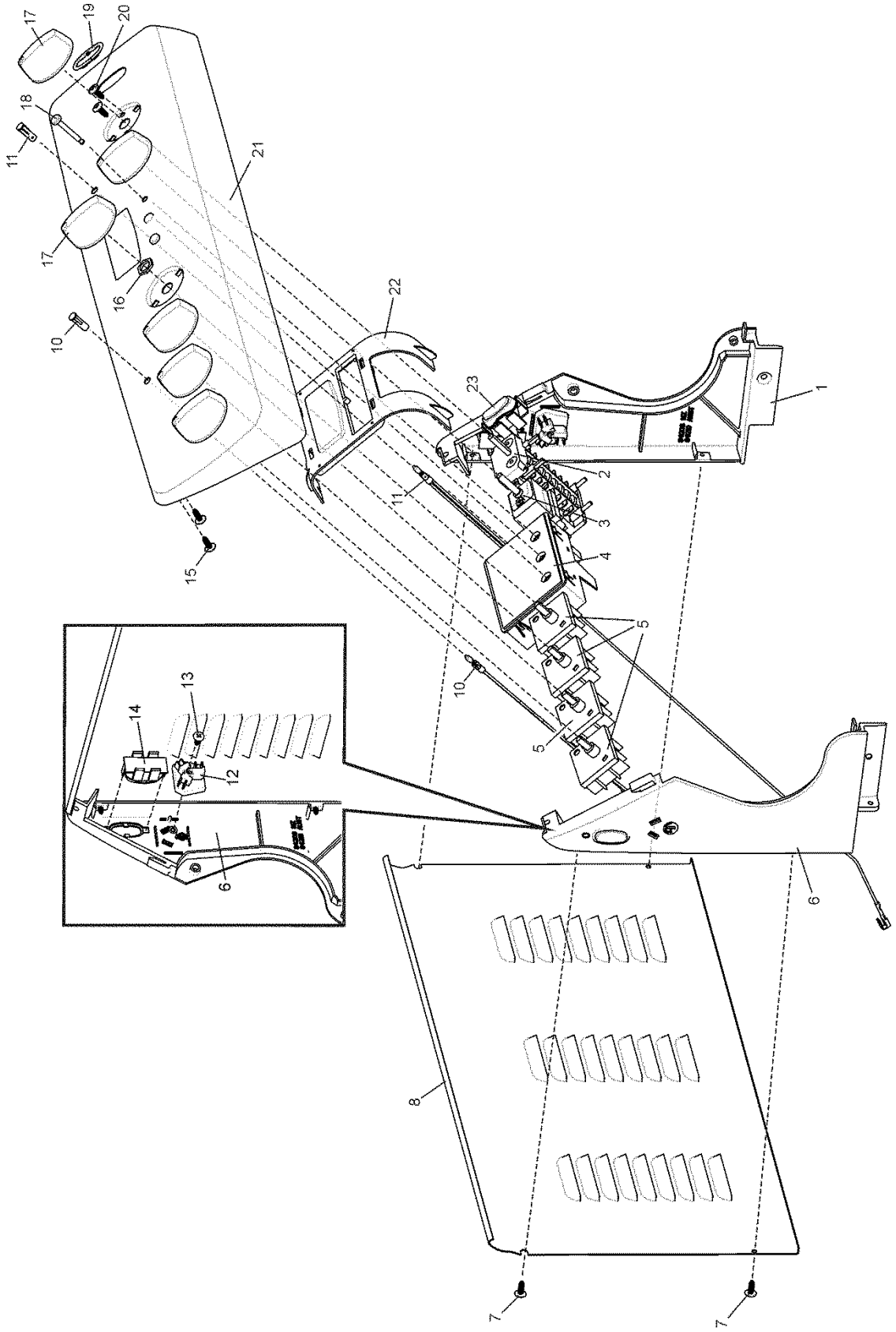

MODELS: WLE624WA WLE626WA EX. VIEW DRAWING 8161

HOB ASSEMBLY

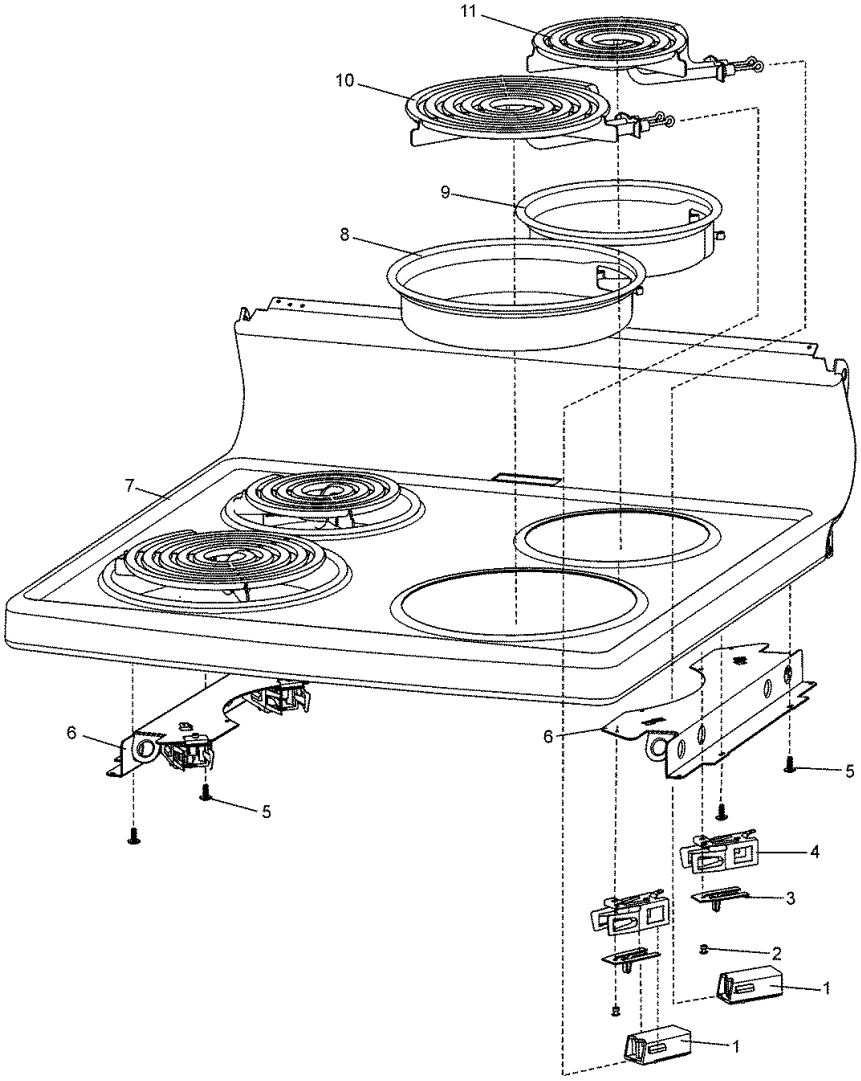

MODELS: WLE624WA WLE626WA

EX. VIEW DRAWING 8042
OVEN DOOR ASSEMBLY

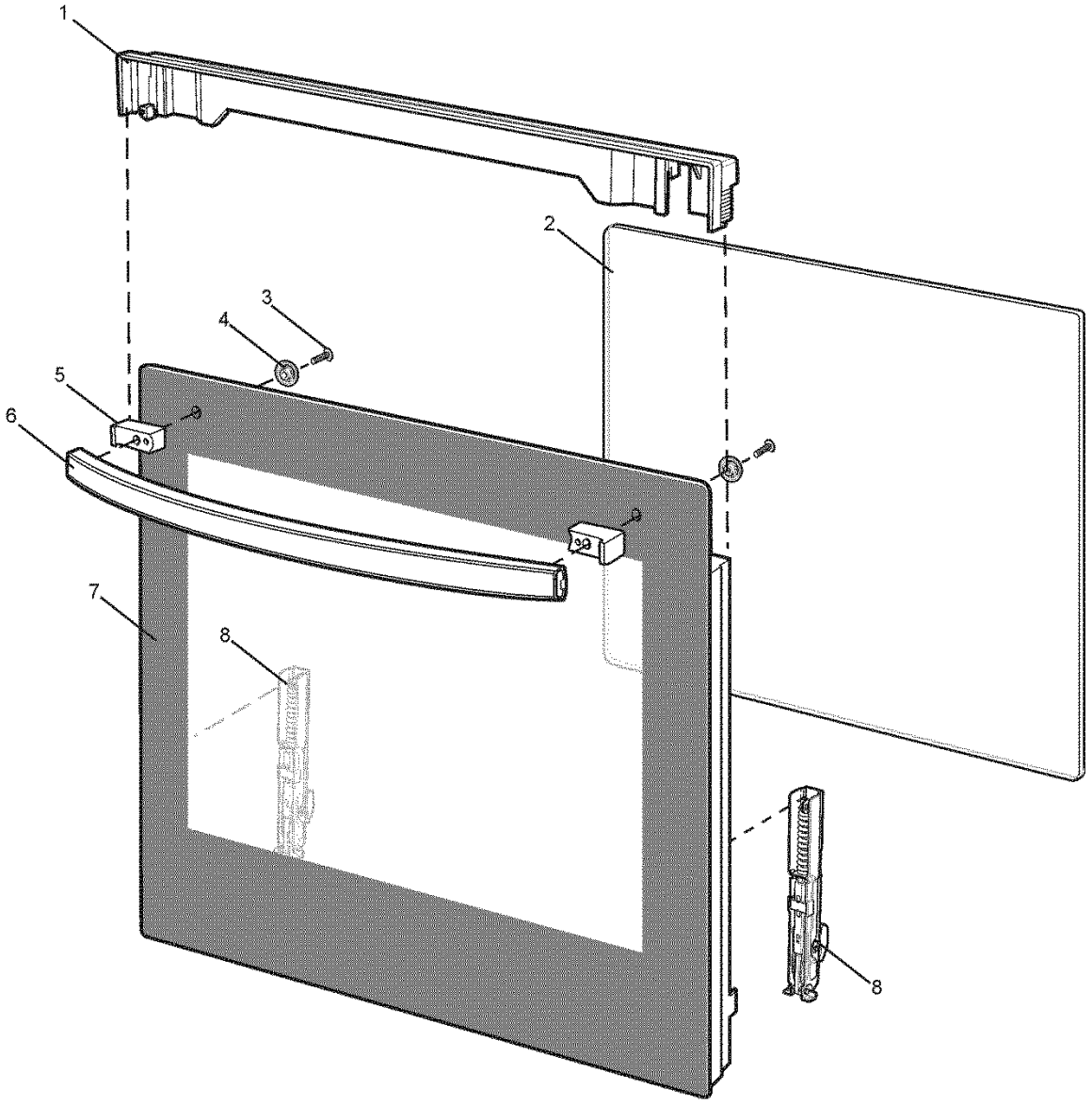

MODELS: WLE624WA WLE626WA

EX. VIEW DRAWING 8169
STORAGE DRAWER ASSEMBLY

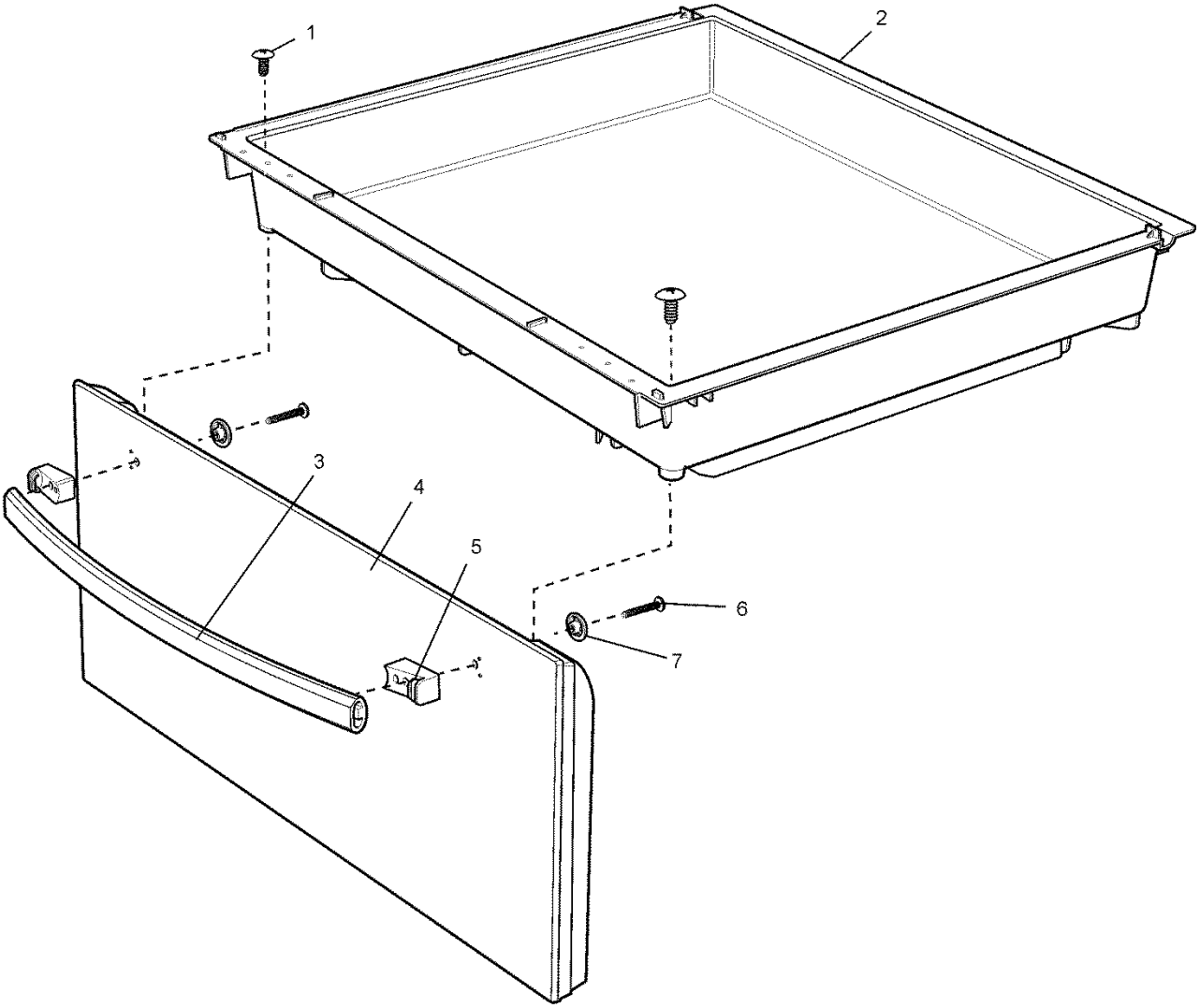

MODEL: WLE624WA
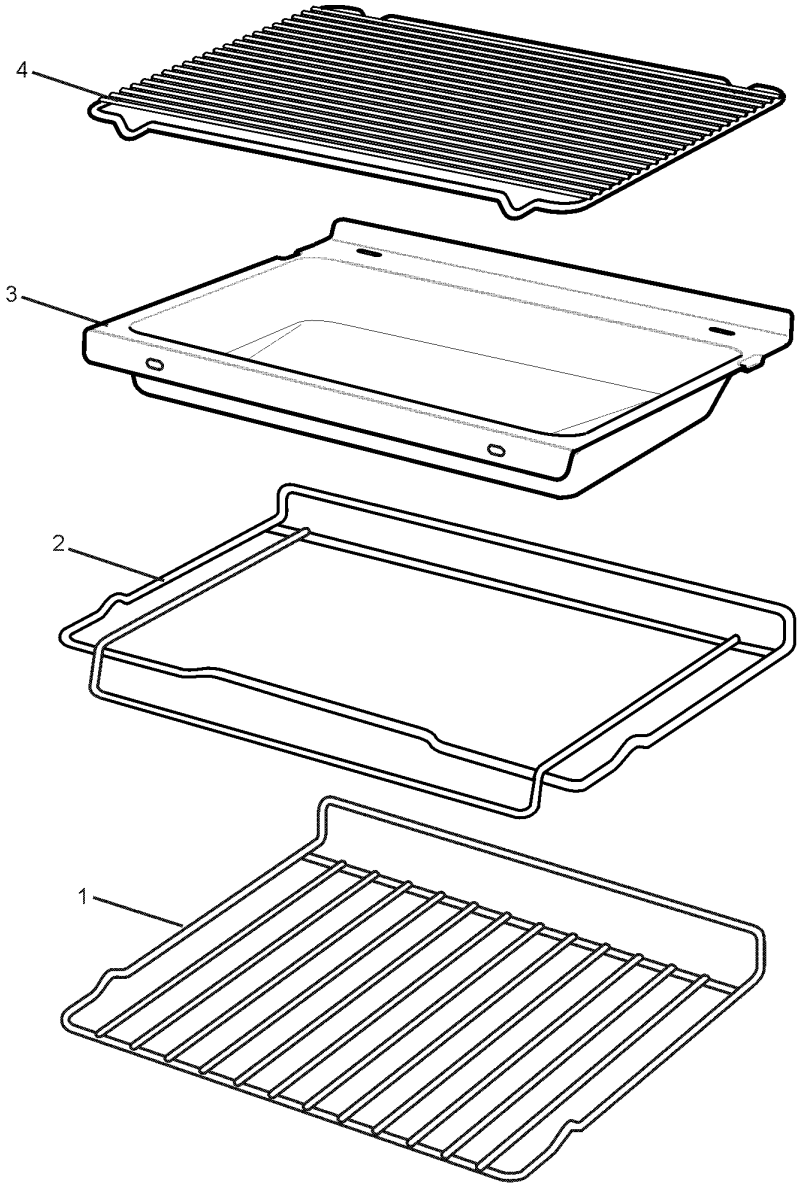
EX. VIEW DRAWING 5683
INTERNAL PACK